DESCRIPTION:
Ex80 Ex100 Ex140 Pumps

CODE:
LR_P00081

LAST RELEASE:
NOVEMBER 2020

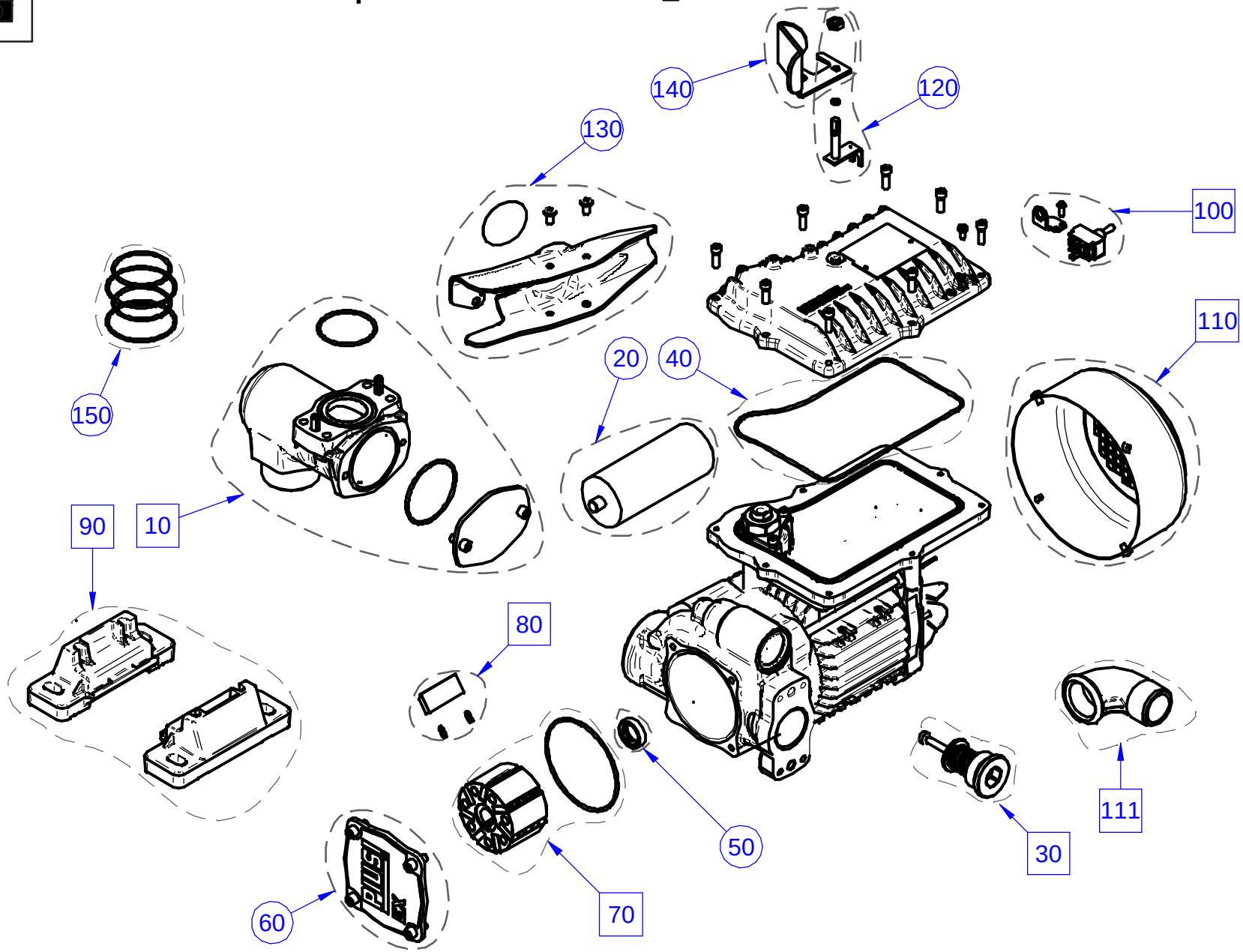

Some components may vary in shape and color or not be present. Always follow codes and quantity shown in list. ○ fixed components □ variable components - - - only reference

The information contained in this drawing is property of PIUSI and any reproduction in part or as a whole without the written permission of PIUSI S.p.a. is prohibited.