DESCRIPTION:
SB325 NOZZLE

CODE:
LR_N00012

LAST RELEASE:
JULY 2019

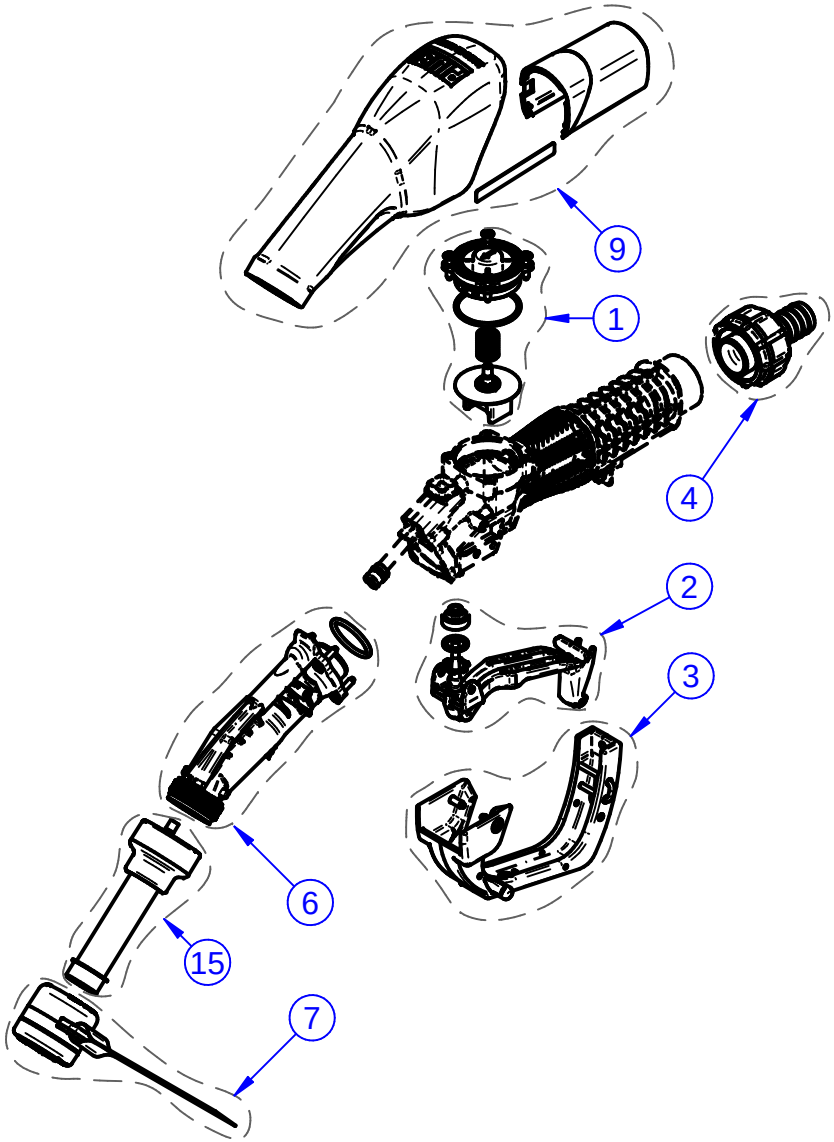

Some components may vary in shape and color or not be present. Always follow codes and quantity shown in list. ○ fixed components □ variable components - - - only reference

The information contained in this drawing is property of PIUSI and any reproduction in part or as a whole without the written permission of PIUSI S.p.a. is prohibited.